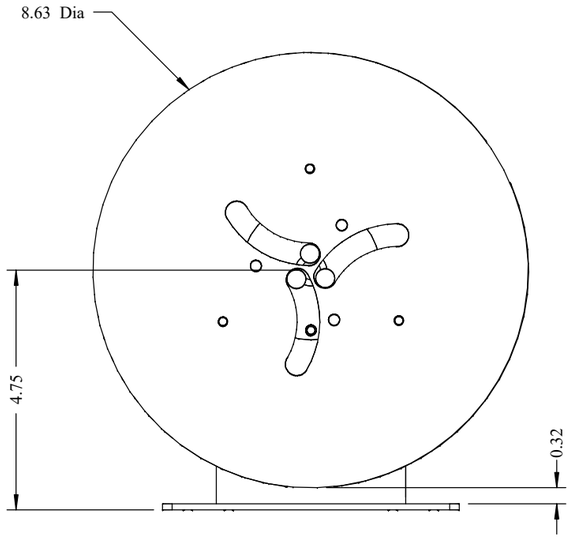

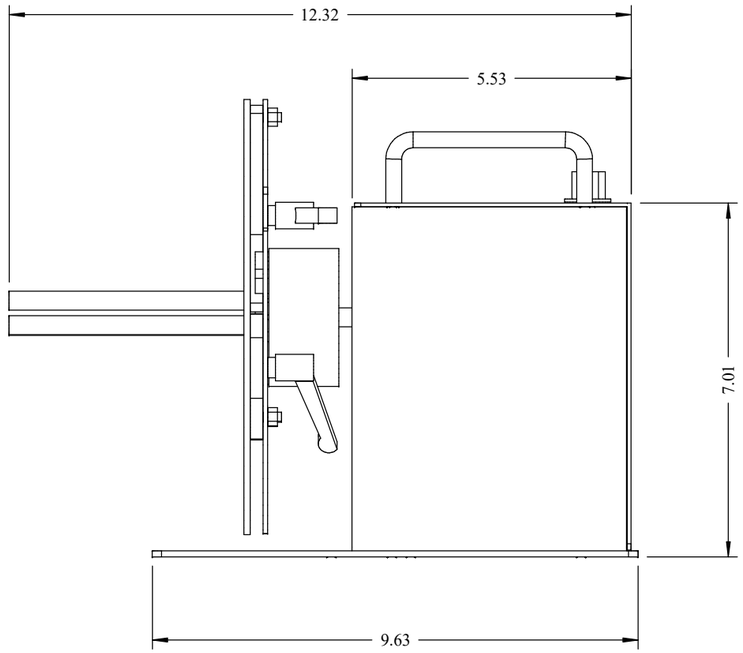



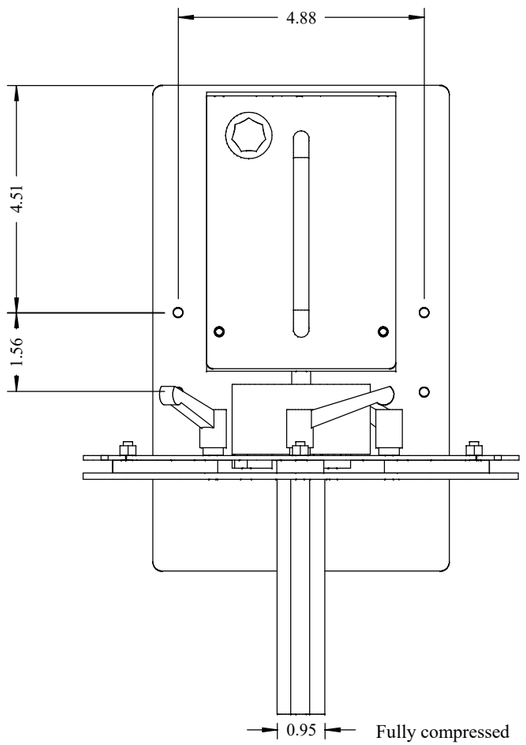

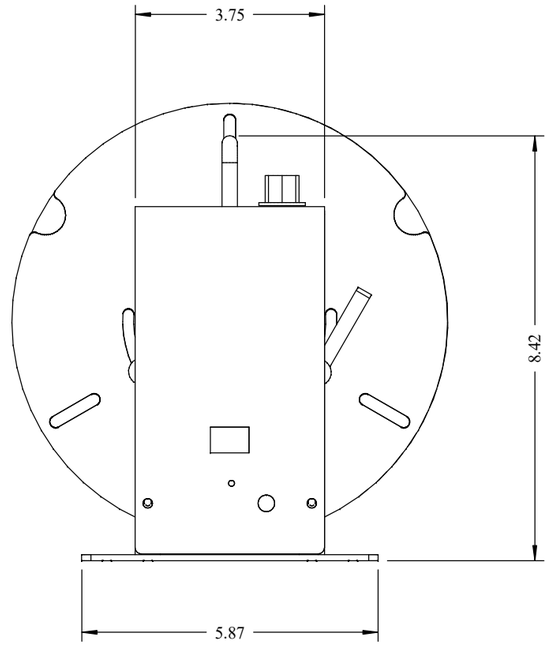

LABELMATE USA
12A Sunset Way, Henderson NV, 89014

TITLE
MC-11

DATE	PART NO.	REV
10/22/20	80-203-0002	A

POWER ADAPTOR	SHEET
PS-MC	1 OF 1